The #2160 Passage Mechanism.

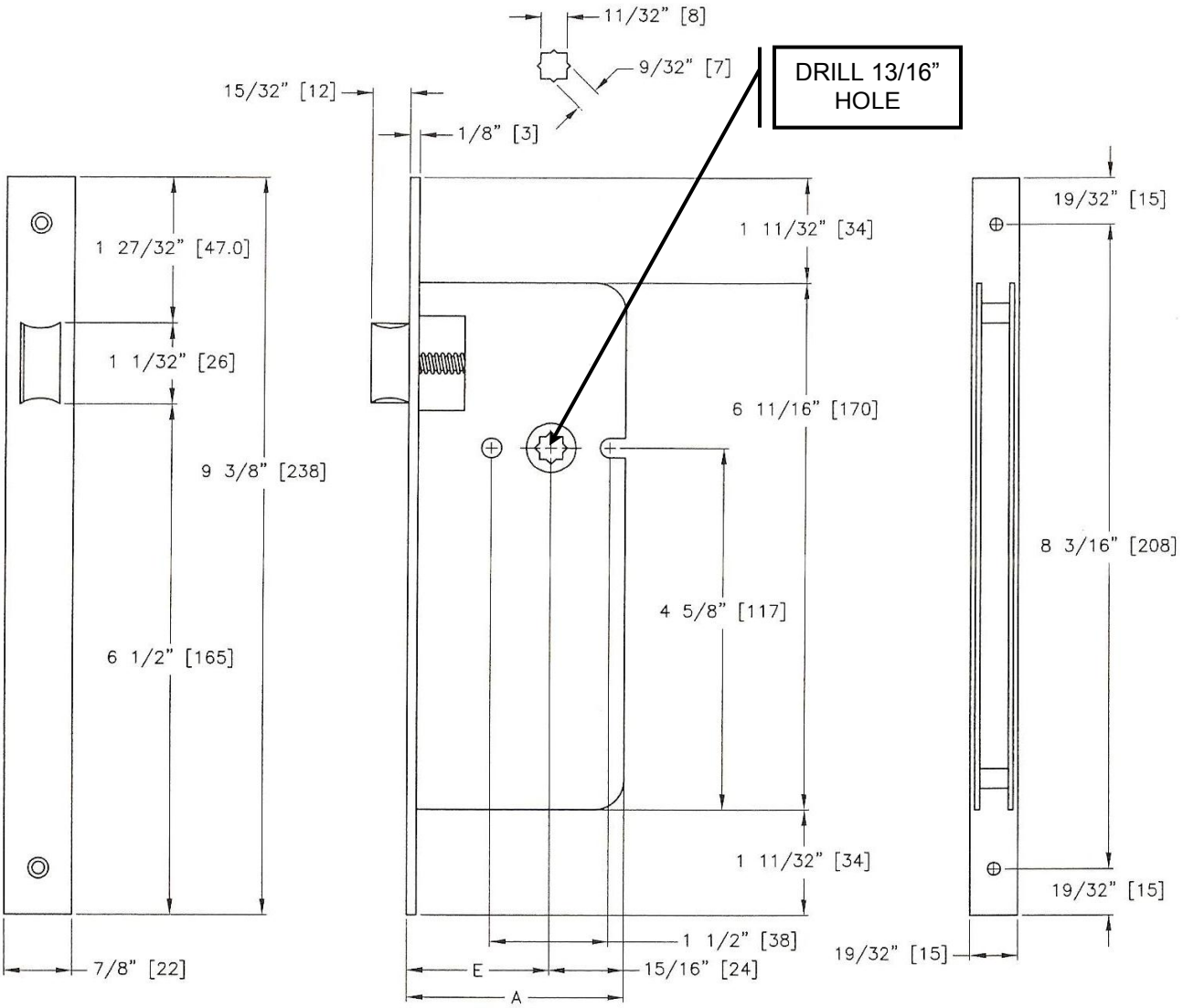

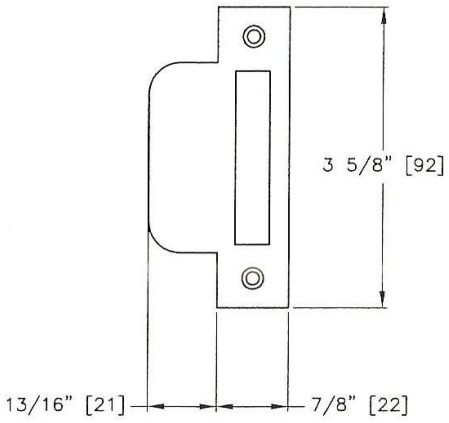

Strike for #2160 Mechanism
Part number 356

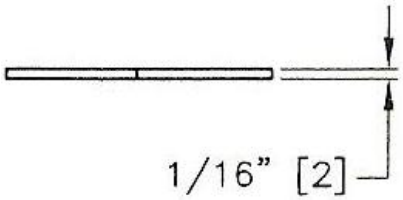

Inches [mm]						
E = Backset	*1-9/16" [40]*	*1-3/4" [45]*	*1-31/32" [50]*	*2-3/8" [60]*	*2-3/4" [70]*	*3-5/32" [80]*
A = E + [24]	*2-1/2" [64]*	*2-23/32" [69]*	*2-29/32" [74]*	*3-5/16" [84]*	*3-11/16" [94]*	*4-3/32" [104]*